Part 2-E) Installation with Tsukayu bracket plates and fork clamps assembly kit

(i) Honda VTX 1300 C/F, 1800 R/C/S/T/F/N

Two hardware kits are needed: a) Q-9972 bracket plates assembly kit; b) Fork clamps (56 - 59, M8) kit

Fig. 2-E-(i)-1

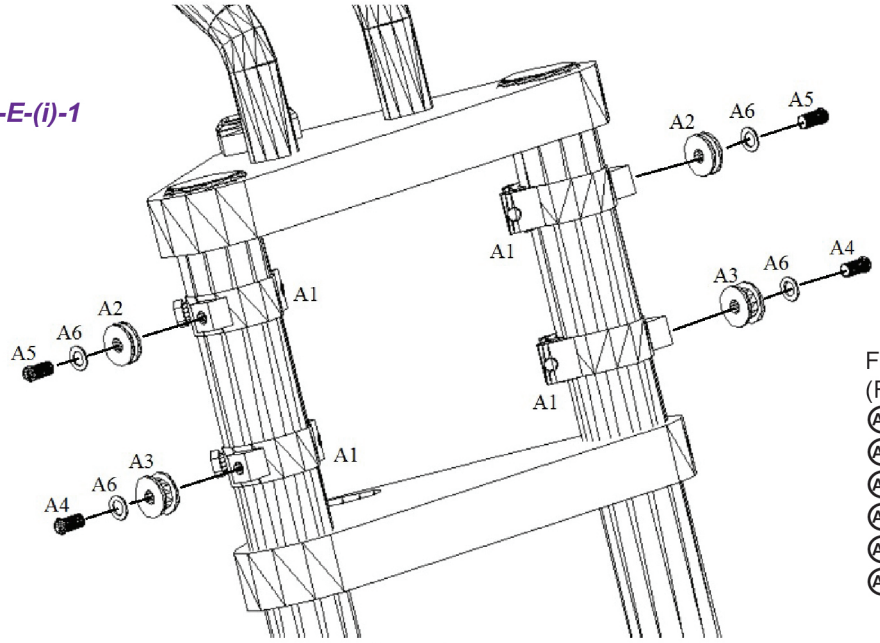

Fork clamps (56 - 59, M8) kit includes:
(Refer to Fig. 2-E-(i)-1):
- (A1) Fork clamps (56 - 59, M8) x 4pcs
- (A2) RK-7.6mm x 2pcs
- (A3) RK-12.6mm x 2pcs
- (A4) Bolt M8 x 20mm (round head) x 2pcs
- (A5) Bolt M8 x 15mm (round head) x 2pcs
- (A6) M8 washer x 4pcs

Fig. 2-E-(i)-2

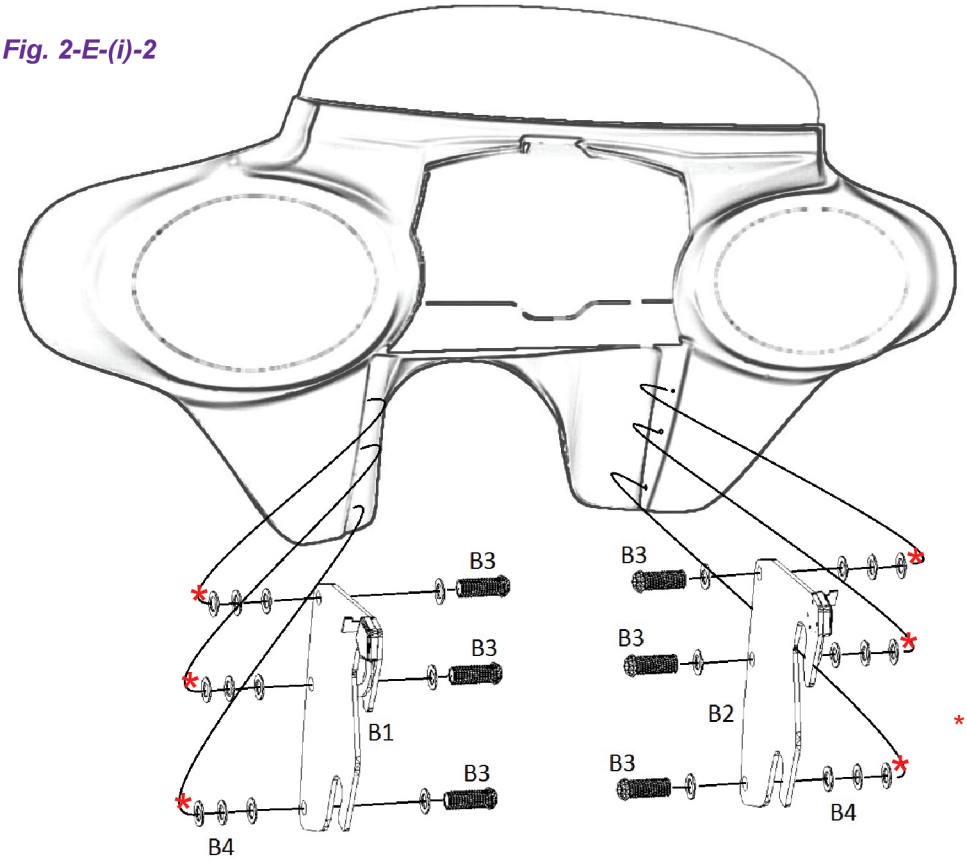

Q-9972 bracket plates kit includes:
(Refer to Fig. 2-E-(i)-2)
- (B1) Q-9972 left x 1pc
- (B2) Q-9972 right x 1pc
- (B3) Bolt M8 x 20mm (round head) x 6pcs
- (B4) additional M8 washers (use if necessary)

*Note: Refer to Step 4

1. Cover gas tank and front fender with protective material.

2. Loosen the bolts on the fork clamps until you can slide them along the forks but tight enough to hold the fairing. Mount 2 fork clamps on each side of the forks with the quick release pins placed outside, but make sure they can be adjusted. Install the fork clamps as shown in Fig.2-E-(i)-1.

3. Measure the distance between the slots on left and right quick release latches, this distance will be used to adjust the distance between the bracket plates on fairing, you need to measure it as accurate as possible, we suggest measuring in mm.

*4. Install the mounting plates assembly as shown in Fig.2-E-(i)-2. Add M8 washers if the distance of the two mounting plates doesn't perfectly match the distance between the two slots of left and right side quick release pins (A2 & A3). the spacers provided are close to what you need, but you may still need to add washers until they perfectly match, make sure you use same number of spacers and washers for all holes. Don't mix up Left and Right bracket plates, the latches come with the bracket plates. Try to put the fairing on, normally you will need to modify the number of washers several times until they match.

5. Now put the fairing on, you may need a helper for doing this step easier. Make sure the bracket plates are tightened securely. Latch the both side bracket plates securely. Tighten all the bolts on the fairing and all bolts on the whole mounting system.

Copyright © Tsukayu - All rights reserved